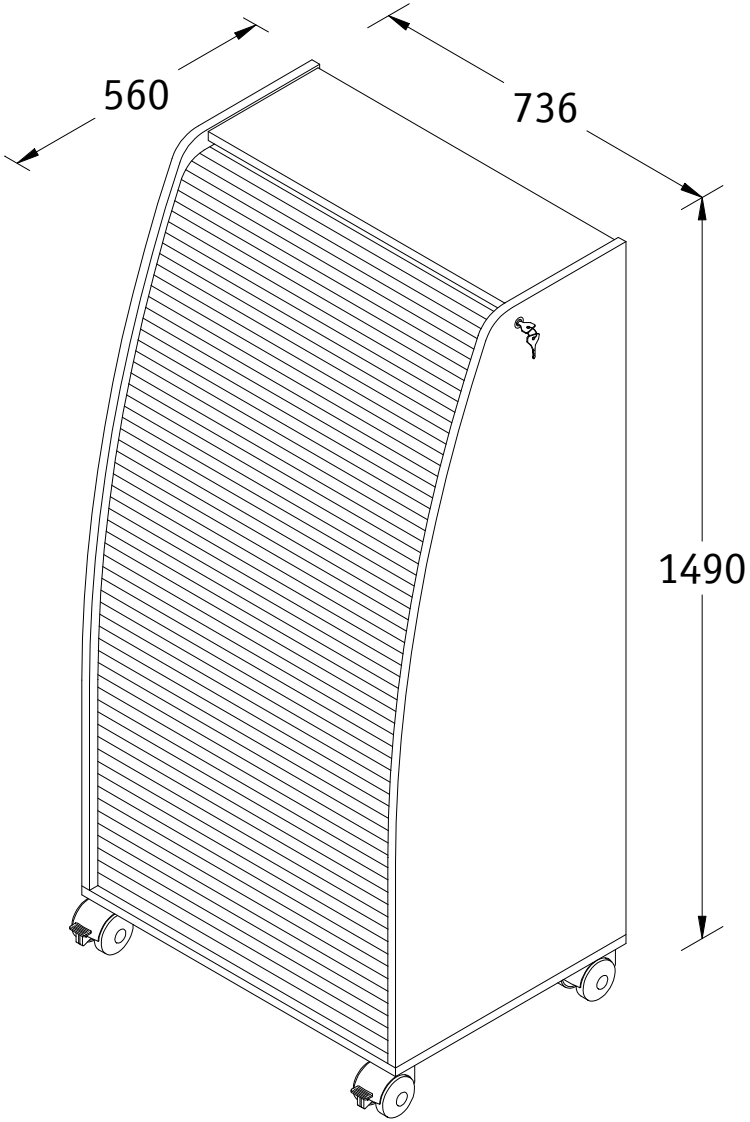

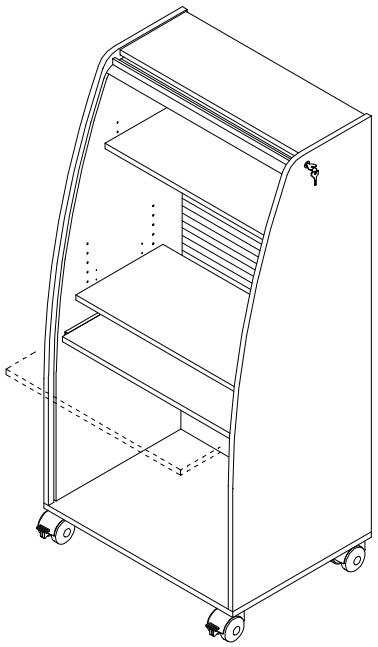

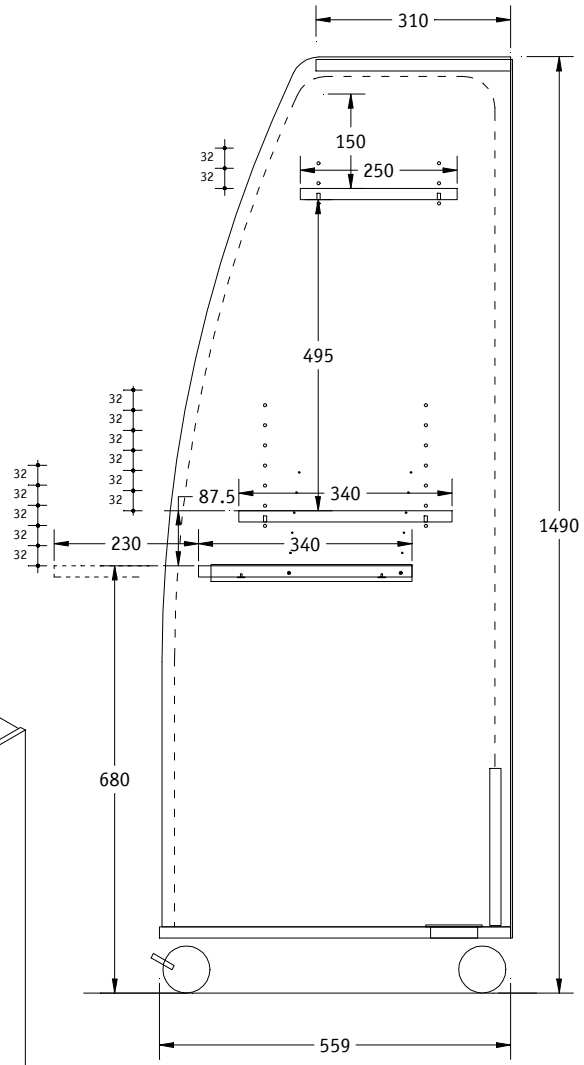

All dimensions in mm - Dimensions en mm - Abmessungen in mm - Alle afmetingen in mm